Multi-Functional Devices

JLSsmall Series :Lever Push Switches (small type)

Features

1. One unit of this switch is sufficient for both function selection and entry of the selected function.
2. J-Lead type terminals located on the side of the body of the horizontal type help downsize equipment.
3. Two options of a keytop-inclusion type and cap type are available.
4. A long life of 1,000,000 cycles is also available.

Specification

- Rating :10mA, 5V DC
- Circuit :Rotation SPDT, Push SPST
- Operating Life :100,000 cycles (JLS1300-0711/0811/141□),
  1,000,000 cycles (JSL1300-101□F/1111F)
- Operating Force :Rotation 1.4N , Push 2.5N,
- Travel :On 0.5mm, Full 0.8mm

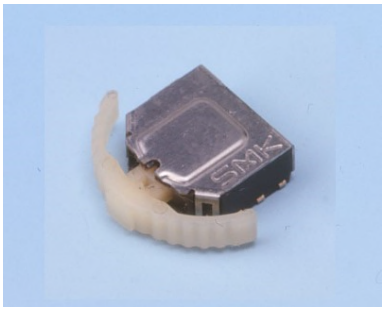

With Center Push

1,000 pcs/reel

JLS1300-0711F

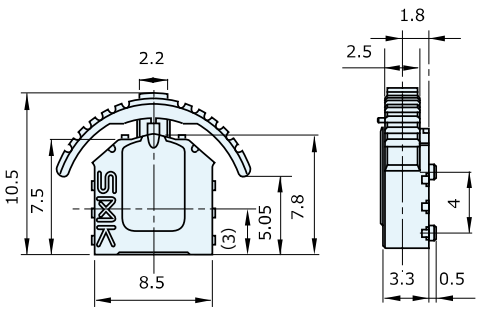

Circuit

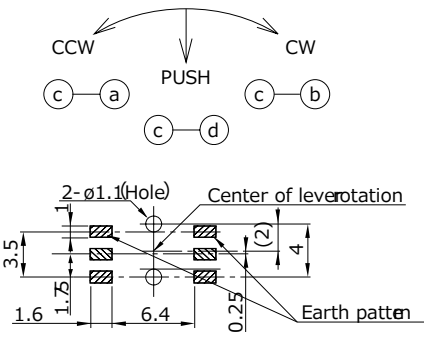

P. C. Board Dimension

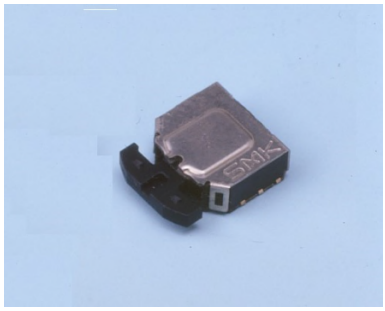

With Center Push

1,000 pcs/reel

JLS1300-0811F

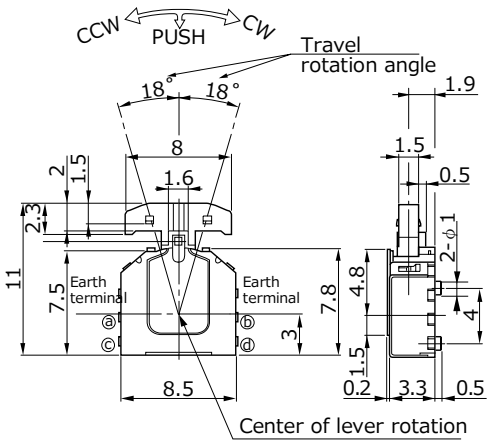

Circuit

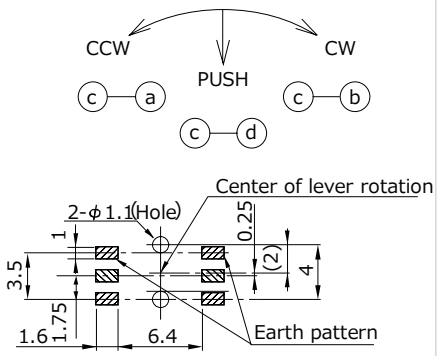

P. C. Board Dimension

Copyright 2021 SMK Corporation All rights reserved. https://www.smk.co.jp/

Multi-Functional Devices

JLSsmall Series :Lever Push Switches (small type)

With Center Push

1,000 pcs/reel

JLS1300-101□

□	Lever Color
1	Gray
2	Black

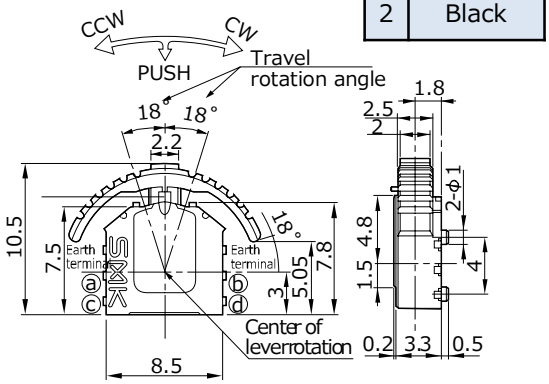

Circuit

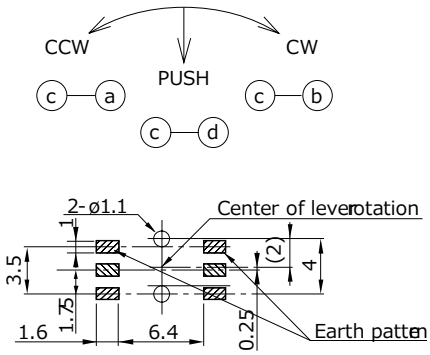

P. C. Board Dimension

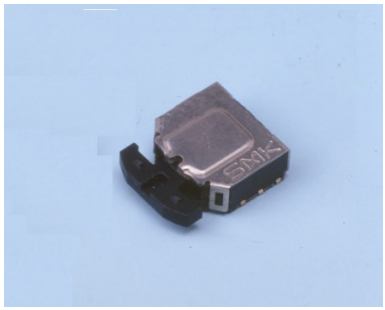

With Center Push

1,000 pcs/reel

JLS1300-1111F

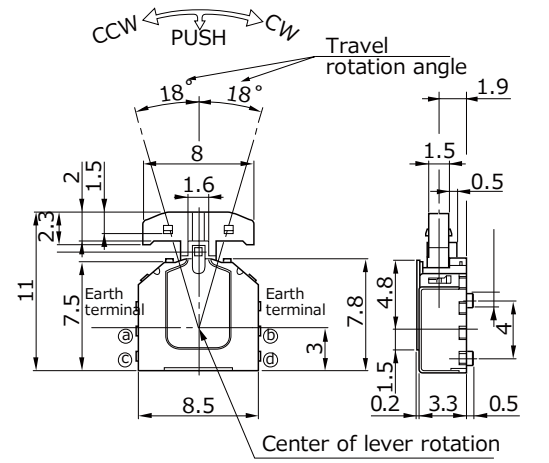

Circuit

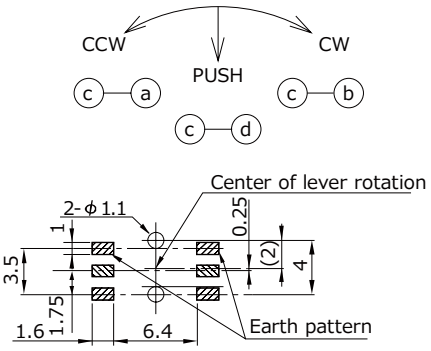

P. C. Board Dimension

With Center Push

1,000 pcs/reel

JLS1300-141□F

□	Lever Color
1	Gray
2	Black

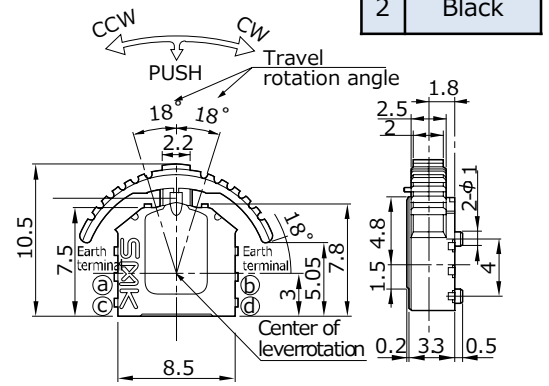

Circuit

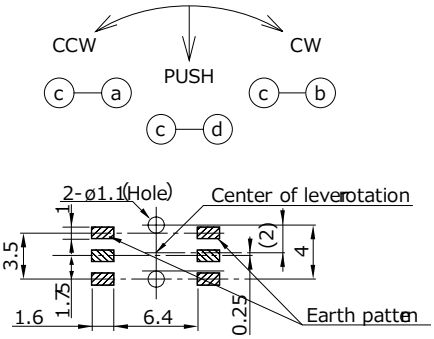

P. C. Board Dimension

Copyright 2021 SMK Corporation All rights reserved. https://www.smk.co.jp/